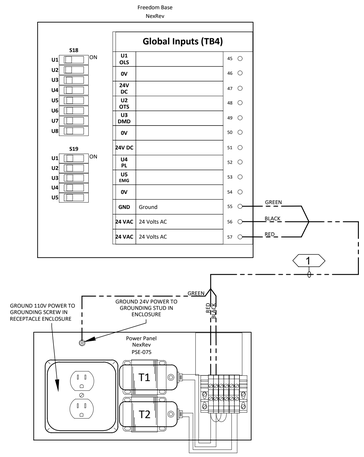

5 EM1 CONTROL POWER WIRING DIAGRAM

SCALE: N.T.S.

VERIFY PRODIGY FIRMWARE VERSION IS 8.02 OR HIGHER

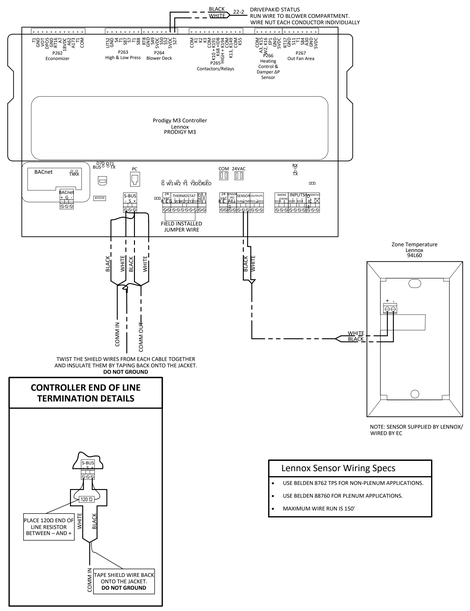

Lennox Sensor Wiring Specs

- USE BELDEN 8762 TPS FOR NON-PLENUM APPLICATIONS.
- USE BELDEN 88760 FOR PLENUM APPLICATIONS.
- MAXIMUM WIRE RUN IS 150'

4 EM1 FIELD WIRING FOR LENNOX W/ TEMPERATURE SENSOR

SCALE: N.T.S.

VERIFY PRODIGY FIRMWARE VERSION IS 8.02 OR HIGHER

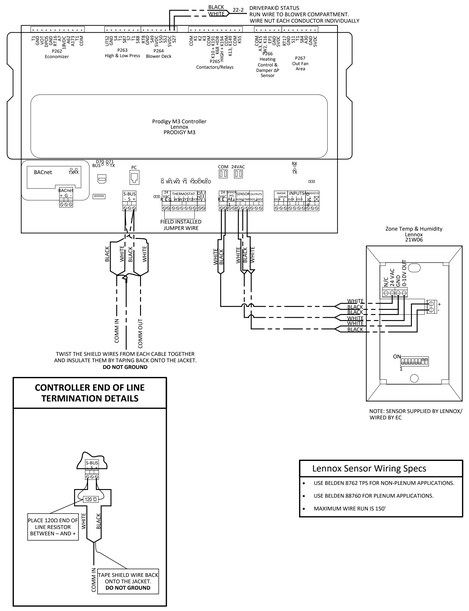

Lennox Sensor Wiring Specs

- USE BELDEN 8762 TPS FOR NON-PLENUM APPLICATIONS.
- USE BELDEN 88760 FOR PLENUM APPLICATIONS.
- MAXIMUM WIRE RUN IS 150'

3 EM1 FIELD WIRING FOR LENNOX W/ COMBINATION SENSOR

SCALE: N.T.S.

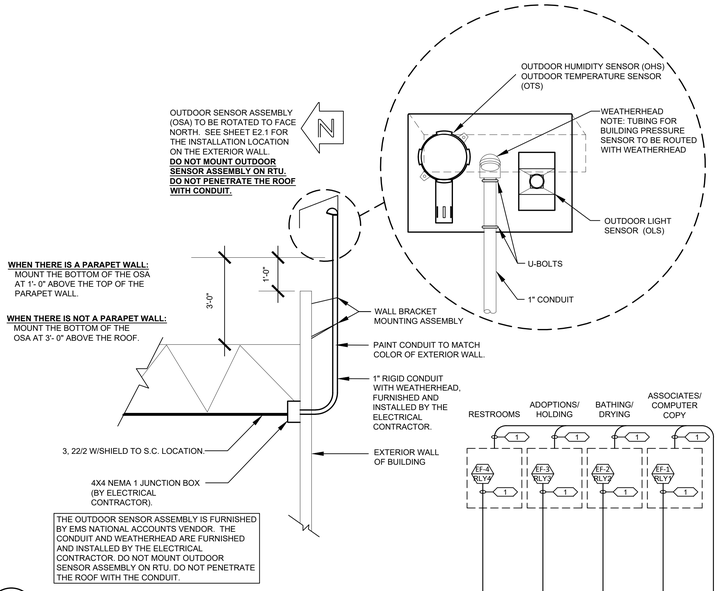

2 EM1 OUTDOOR SENSOR ASSEMBLY (OSA)

SCALE: N.T.S.

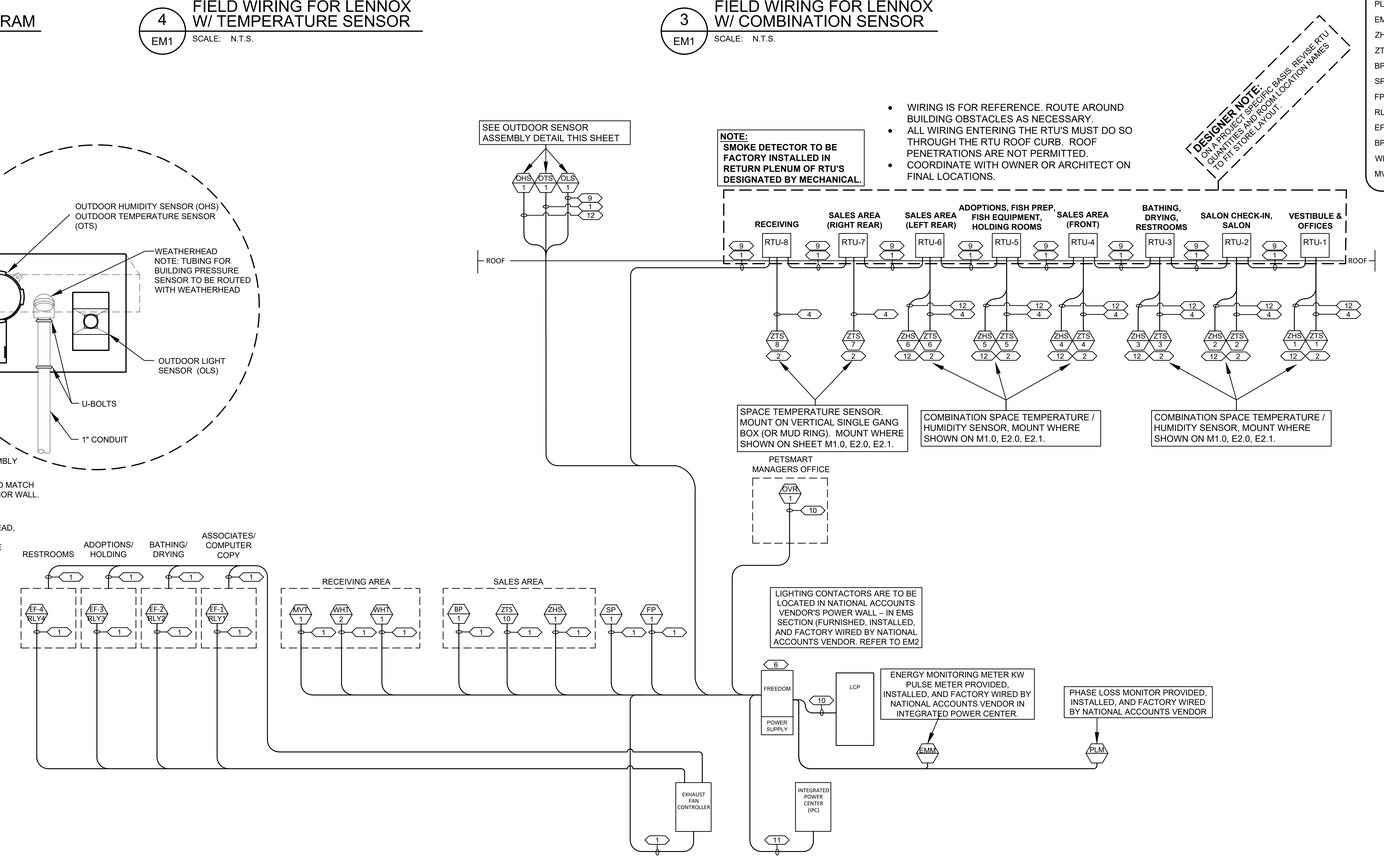

SYMBOL LEGEND	
XXX / #	DEVICE TAG: REFER TO WIRE WIRING 7 DEVICE CHART

1 EM1 ONE LINE DIAGRAM FOR COMM. LINK & SYSTEM INTERFACE

SCALE: N.T.S.

KEYED NOTES

1. (1) 2C 22 GA. TWISTED SHIELDED WIRE, USE PLENUM RATED WIRE IN CONCEALED SPACE ABOVE CEILINGS.
2. WTS-2051 SENSOR SUPPLIED BY LENNOX
3. SUPPLIED, WIRED AND ASSEMBLED BY NATIONAL ACCOUNTS VENDOR.
4. (1) 2C 22 GA. TWISTED SHIELDED PAIR (SENSOR MOUNTED ON VERTICAL SINGLE GANG BOX).
5. (1) 2C 22 GA. TWISTED SHIELDED PAIR
6. (2) 2C 18 GA. TWISTED SHIELDED PAIR
7. (1) 4C 18 GA. TWISTED SHIELDED PAIR
8. EMS CONTROLLER (INTERNAL TO NATIONAL ACCOUNTS VENDOR'S INTEGRATED POWER CENTER).
9. COMMUNICATION LINK
10. (2) 10C 18 GA.
11. (1) 4C 18 GA.
12. COMBINATION TEMPERATURE/HUMIDITY SENSOR SUPPLIED BY NATIONAL ACCOUNTS MECHANICAL VENDOR, INSTALLED AND WIRED BY ELECTRICAL CONTRACTOR. SEE SHEET M1.0.

GENERAL NOTES

1. ALL EMS EQUIPMENT (WITH EXCEPTION TO THE EQUIPMENT INTERNAL TO NATIONAL ACCOUNTS VENDOR'S INTEGRATED POWER CENTER) SHALL BE PURCHASED BY GENERAL CONTRACTOR OR ELECTRICAL CONTRACTOR FROM EMS NATIONAL ACCOUNTS VENDOR. (NO EXCEPTIONS). CONTACT NEXREV NATIONAL ACCOUNTS FOR PRICING (972) 578-0505.
2. ELECTRICAL CONTRACTOR IS RESPONSIBLE FOR SUPPLYING ALL CONDUIT, WIRE, PULL BOXES, AND JUNCTION BOXES REQUIRED FOR A COMPLETE INSTALLATION. ALL CABLE FOR INSTALLATION SHALL BE WHITE IN COLOR.
3. ALL WORK SHALL CONFORM WITH THE LOCAL STATE AND NATIONAL ELECTRICAL CODES. ELECTRICAL CONTRACTOR SHALL PAY FOR ALL INSPECTIONS AND PERMITS.
4. WHEN LOCAL CODES PERMIT, WIRING SHALL BE RUN OPEN, SECURED AT REGULAR INTERVALS.
5. ALL WIRING AND/OR CONDUIT SHALL BE CONCEALED U.N.O.
6. ELECTRICAL CONTRACTOR SHALL FURNISH ALL POWER WIRING TO EMS EQUIPMENT.
7. ALL POWER WIRING SHALL BE FIRST GRADE COPPER WITH 600 VOLT INSULATION AND SHALL BE 14 GA.THWN.
8. ELECTRICAL CONTRACTOR IS RESPONSIBLE TO MOUNT AND WIRE ALL ENERGY MANAGEMENT EQUIPMENT AS PER DRAWINGS.
9. ALL EMS TERMINATIONS SHALL BE DONE BY ELECTRICAL CONTRACTOR AS SHOWN.
10. ELECTRICAL CONTRACTOR SHALL LABEL ALL WIRES AND CABLES ON BOTH ENDS AS SHOWN ON PLANS.
11. ELECTRICAL CONTRACTOR SHALL BE RESPONSIBLE FOR HAVING A TRUE EARTH GROUND TO ALL EMS EQUIPMENT AS SHOWN ON THESE DRAWINGS.
12. ELECTRICAL CONTRACTOR SHALL CONTACT EMS NATIONAL ACCOUNTS VENDOR FOR ANY QUESTIONS ON EMS SYSTEM DRAWINGS OR INSTALLATION.
13. WHEN THE ELECTRICAL CONTRACTOR HAS COMPLETED INSTALLATION OF THE EMS SYSTEM, AND COMPLETED THE INSTALLATION CHECKLIST THEY SHALL BE RESPONSIBLE FOR COORDINATION WITH EMS NATIONAL ACCOUNTS VENDOR TO ESTABLISH START-UP DATE FOR EMS SYSTEM CONTACT (972) 578-0505. SEE SPECIFICATION SECTION 01010 PAGES 3 & 4 OF 18.

ABBREVIATIONS

OHS	OUTDOOR HUMIDITY SENSOR
OLS	OUTDOOR LIGHT SENSOR
OTS	OUTDOOR TEMPERATURE SENSOR
OVR	OVERRIDE
PLM	PHASE LOSS MONITOR
EMM	ENERGY MONITORING METER
ZHS	ZONE HUMIDITY SENSOR
ZTS	ZONE TEMPERATURE SENSOR
BP	BUILDING PRESSURE SENSOR
SP	SECURITY PANEL
FP	FIRE PANEL
RLY	RELAY
EF	EXHAUST FAN
BPS	BUILDING PRESSURE SENSOR
WHT	WATER HEATER TEMPERATURE SENSOR
MVT	MIXING VALVE TEMPERATURE

NOTE FOR ELECTRICAL CONTRACTOR:

ALL WALL PLATE SENSORS IN THE SALES AREA SHALL BE MOUNTED AT 7'-6" ABOVE FINISHED FLOOR ON THE BACK OF ALL COLUMNS. ALL OTHER SENSORS & T'STATS SHALL BE MOUNTED AS SHOWN ON MECHANICAL DRAWINGS.

NOTE FOR MECHANICAL CONTRACTOR:

IT SHALL BE THE RESPONSIBILITY OF THE MECHANICAL CONTRACTOR TO FULLY CHECK, TEST, AND START ROOF-TOP EQUIPMENT. CHECK ALL SUPPLY AND DISCHARGE PRESSURE IN REFRIGERANT LINES.SEE START-UP CHECKLIST IN SPECIFICATIONS.

NOTE:

EMS EQUIPMENT INTERNAL TO NATIONAL ACCOUNTS VENDOR'S POWER WALL WILL BE FURNISHED BY NATIONAL ACCOUNTS VENDOR.

NOTE:

ONCE POWER IS APPLIED TO THE ROOFTOP HVAC UNIT, AND THE HVAC TECHNICIAN HAS COMPLETED THE ROOFTOP UNIT STARTUP PROCEDURE. THE ROOFTOP UNITS WILL RUN IN A DEFAULT MODE FROM THE RETURN AIR SENSOR CONTROLLING TO A 74° COOLING SET POINT AND A 70° HEATING SET POINT WITH AN INTERMITTENT FAN.

NOTE:

FOR EMS EQUIPMENT PRICING. GENERAL CONTRACTOR OR ELECTRICAL CONTRACTOR SHALL CONTACT:

CRAIG DAVIS
NATIONAL ACCOUNTS PETSMART QUOTES
NEXREV CORPORATION
601 DEVELOPMENT DRIVE
PLANO, TX 75074
PH: (972) 303-8586 CELL: (720) 384-9698

(SEE REQUIRED VENDOR LIST ON SHEET F2.0 FOR ADDITIONAL INFORMATION)

NOTE:

EMS NATIONAL ACCOUNTS VENDOR TO FURNISH SITE SPECIFIC DRAWINGS TO CONTRACTOR. VERIFY FINAL WIRING REQUIREMENTS WITH EMS NATIONAL ACCOUNTS VENDOR SITE-SPECIFIC DRAWINGS.

TENANT:

PETSMART

19601 North 27th Avenue
Phoenix, Arizona 85027 - (623) 580-6100

PROJECT:

16K 2026 U.S. INSTRUCTION SET

AUGUST 10, 2026

ARCHITECT:

CONSULTANT:

SEAL:

CITY SEAL:

DISCLAIMER:
THIS DRAWING AND DESIGN IN COPYRIGHT PROTECTED WHICH SHALL NOT BE USED, REPRODUCED OR REVISED WITHOUT WRITTEN PERMISSION BY PETSMART. THE CONTRACTOR SHALL CHECK AND VERIFY ALL DIMENSIONS AND UTILITY LOCATIONS AND REPORT ALL ERRORS AND OMISSIONS PRIOR TO COMMENCING WORK.
THIS DRAWING IS NOT TO BE SCALED.

ISSUED FOR:

#	DESCRIPTION	DATE

PROJECT NO: 16K 2026 US INSTRUCTION SET

ORIGINAL SCALE: AS INDICATED

DRAWN BY: XXX

CHECKED BY: XXX

IF THIS BAR IS NOT 1" LONG, ADJUST YOUR PLOTTING SCALE

1"

PAGE # 01 OF: 47

DISCIPLINE: ELECTRICAL

TITLE:

ENERGY MANAGEMENT

SHEET NUMBER:

EM1